SigenMate Series

User Manual

Version: 01

Release date: 2026.07.20

Copyright Notice

Copyright© 2026 SigenergyTechnology Co., Ltd. All Rights Reserved.

Description in this document may contain predictive statements regarding financial and operating results, product portfolio, new technology, configurations and features of product. Several factors could cause difference between actual results and those expressed or implied in the predictive statements. Therefore, description in this document is provided for reference purpose only and constitutes neither an offer nor an acceptance. Sigenergy Technology Co., Ltd. may change the information at any time without notice.

SIGENERGY and other Sigenergy trademarks are owned by Sigenergy Technology Co., Ltd.

All trademarks and registered trademarks in this document belong to their owners.

Website | LinkedIn | YouTube

www.sigenergy.com

Contents

Revision History 04
Preface 05
Chapter 1 Safety Precautions 06
Chapter 2 Product Introduction 08
2.1 Product Introduction 08
2.2 Indicator Descriptions 11
2.3 Label Description 13
2.4 System Wiring Introduction 14
Chapter 3 Location Requirements 16
Chapter 4 Installing the SigenMate 18
Chapter 5 Electrical Connections 20
Chapter 6 SigenMate Power On/Off 24
Chapter 7 Using the App to Manage the SigenMate 25
7.1 Downloading the App and Logging In 25
7.2 Adding the SigenMate 27
7.3 (Optional) Adding the Meter 29
7.3.1 Adding the Sigen Meter 29
7.3.2 Adding the P1 Meter 31
7.3.3 Adding the IR Meter 32
7.4 Energy Storage Working Mode 33
7.5 Backup Capacity Setup 36
7.6 Deleting the System 37
Chapter 8 System Maintenance 38
8.1 Routine Maintenance 38
8.2 SigenMate Capacity Expansion 39
8.3 Operating with Low battery 40
8.4 Emergency Measures 41
Chapter 9 FAQ 43
Chapter 10 Appendix 45

Revision History

Version	Date	Description
01	2026.07.20	Initial release

Preface

Overview

This document primarily introduces the SigenMate series (hereinafter referred to as SigenMate), including product introduction, system wiring, and operation and maintenance.

Intended Audience

This document is intended for product users and professionals.

Icon Definition

The following icons may be used in the document to indicate safety precautions or key information. Before installation and operation, please be familiar with and master the icons and the corresponding definitions.

Icon	Definition
Danger	Danger. Indicates an imminently hazardous situation which, if not avoided, will result in death or serious personal injury.
Warning	Warning. Indicates a potentially hazardous situation which, if not avoided, will result in serious personal injury or property damage.
Caution	Caution. Indicates a potentially hazardous situation which, if not avoided, will result in property damage.
Tips	Indicates important or key information and provides operation tips.

Chapter 1 Safety Precautions

Basic Information

Before installation, operation, and maintenance of the device, familiarize yourself with this document.
The "Caution," "Warning," and "Danger" statements described in this manual are only supplementary to all safety notices.
The Company shall not be liable for device damage or property damage caused by the following reasons:

- Approval not obtained from national or regional power authorities.
- The installation environment does not comply with relevant international, national, or regional standards.
- Failure to comply with local laws, regulations, and standards when operating or maintaining the device.
- Do not use cables or other accessories that do not match the Sigen brand.
- The household outlet is not properly grounded.
- The installation area does not meet the requirements of the device.
- Failure to operate according to the instructions and precautions in the manual.
- Failure to follow the operational requirements indicated on warning labels on the device or tools.
- Negligence, improper operation, or deliberate damage.
- Battery capacity loss or irreversible damage resulting from your failure to charge the device in a timely manner.
- Damage resulting from you or a third-party company changing the usage scenario of the company's device. (For example, mixing our company's battery pack with other batteries, or using our company's battery pack with converters from other brands, etc.).
- The device is damaged because the customer or a third-party company fails to use the accessories supplied with the packing box or purchase and install accessories of the same specification.
- Device damage caused by unauthorized disassembly or replacement of the device or modification of software code, or other improper operations.
- Device damage caused by force majeure (such as war, earthquake, fire, storms, lightning, floods, and debris flow).
- Damage caused by natural environmental conditions or external power parameters failing to meet the standard requirements for normal operation. For example, the actual operating temperature of the device is too high or too low.
- The device is stolen.
- The device is damaged after the warranty period expires.

Safety Requirements

Danger

- Battery pack overheating may cause fire, explosion, etc. Do not expose the device to high-temperature environments or keep heat sources near the device for extended periods (such as open flames, and heaters).
- Do not clean or soak the device with water, alcohol, or oil to prevent leakage current or battery pack leakage.
- Do not strike or hit the device.

Warning

- Do not touch the hot surface around the heat sink when the device is in operation.
- Keep the device at least 20 mm away from the wall during operation to prevent fire caused by high temperatures.

Caution

- Do not use the device with faults. Do not disassemble the device yourself.
- Carbon dioxide fire extinguishers and ABC dry powder fire extinguishers are recommended.
- If the device fails to enter the charging state, please contact after-sales service promptly.

Do Not Use the Device in the Following Situations:

- When connected to public infrastructure systems.
- When connected to emergency medical equipment.
- When connected to elevators and other control devices.
- Any other similar situations.

Chapter 2 Product Introduction

2.1 Product Introduction

The SigenMate can operate as a standalone device or be used in combination with the SigenMate BAT to store and release electrical energy. Each SigenMate can stack up to 6 SigenMate BATs.

Product Models

- SigenMate 2700 Ultra
- SigenMate BAT 2700

Product Dimensions

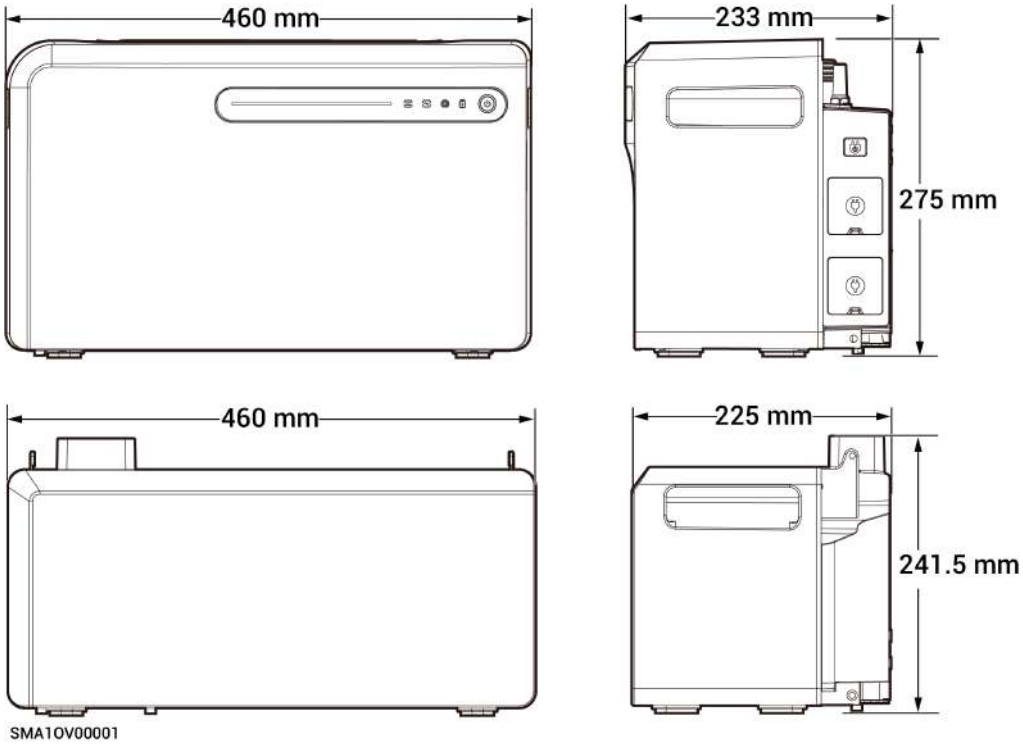

Product Appearance

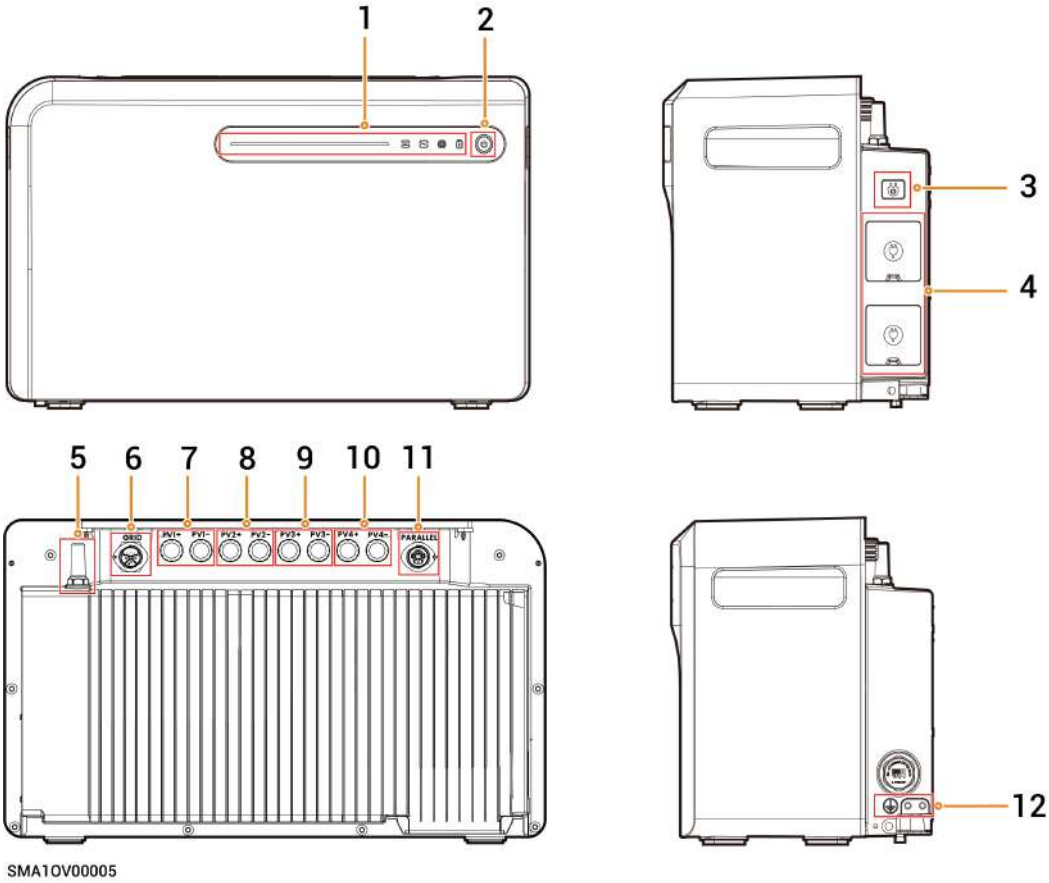

No.	Model/Name	Description
1	Indicator	Please refer to "Indicator Descriptions".
2	Power button	● Press and hold for 3 seconds to turn the power on, and the power indicator turns on. Press and hold for 3 seconds again to turn the power off, and the power indicator turns off. ● While in standby, press for 1 second to turn the power on, and the power indicator turns on. Press for 1 second again to turn the power off, and the power indicator turns off. ● Short press 5 times within 3 seconds to reset the WLAN; the signal indicator will flash white for 5 seconds.
3	AC socket switch	Controls the AC socket on/off. Press for 1 second to turn on, and the green light turns on. Press for 1 second again to turn off, and the green light turns off.
4	AC socket	For connecting electrical devices.
5	WLAN antenna	Supports WLAN (2.4 GHz / 5 GHz) and Bluetooth connections.
6	Grid port	Used to connect to the power grid.
7	PV input interface 1	4 PV input channels, supporting connection of 8 PV modules.
8	PV input interface 2	

No.	Model/Name	Description
9	PV input interface 3	4 PV input channels, supporting connection of 8 PV modules.
10	PV input interface 4	
11	Parallel interface	For connecting another SigenMate.
12	Grounding point	Connect the protective grounding cable.

2.2 Indicator Descriptions

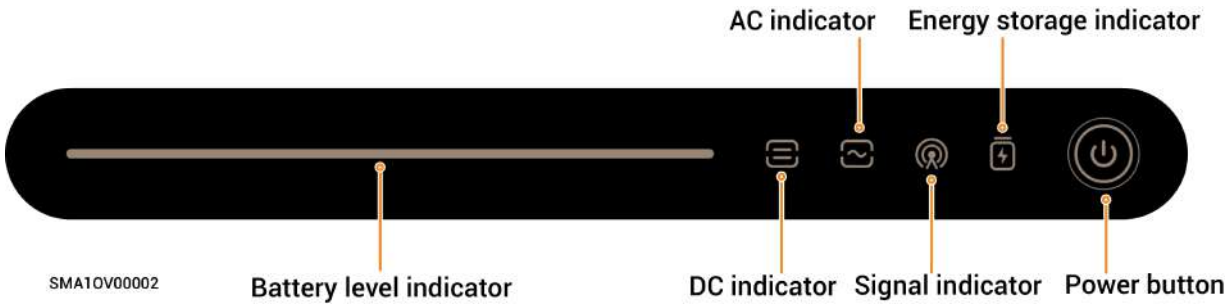

Indicator Light Overview

No.	Status	Category	Description
1	Related feature not connected	DC indicator, AC indicator, and energy storage indicator	Off
2	The related function is connected but not powered		The white indicator is on
3	Running		Green/blue indicator is on
4	Fault		Orange/red indicator is on
5	On standby	AC indicator and signal indicator	AC indicator is solid white, signal indicator is solid green, and other indicators are off
6	Power off	Power button	Off
7	Power activation		Solid white

Indicator Status Description

Category	Indicator	Description	Meaning
DC indicator		Solid white	The DC side has been connected, but is not running.
		Solid green	The DC side is running.
		Off	The DC side is not connected.
		Orange flashing	The DC side fails.
		Solid red	The inverter fails.
AC indicator		Solid white	The AC side has been connected, but is not running.
		Solid green	Running in an on-grid state.
		Solid blue	Running in an off-grid state.
		Off	The AC side is not connected.
		Blue flashing	Running with overload in an off-grid state.
		Orange flashing	The AC side fails.
		Solid red	The inverter fails.
Signal indicator		Off	The management system is not connected.
		Green flashing	The near-end app has been connected.
		Solid green	The management system has been connected via WLAN.
Energy storage indicator		Solid white	All SigenMate BATs have been connected, but are not running.
		Green flashing	Battery pack charging.
		Blue flashing	Battery pack discharging.
		Off	All battery packs are in sleep mode or not connected.
		Red flashing	Partial battery packs fail.
		Solid red	All battery packs fail.

2.3 Label Description

Symbol	Definition
	Danger! High voltage High voltage is present when the device is powered on. Do not open the casing when the device is running. Any maintenance or servicing operations must be performed by trained and skilled electrical engineers.
	Warning! Life-threatening Potential risks exist when the device is operating. Please take protective measures before operating the device.
	Internal components may continue discharging after the device is powered off. Wait for the specified duration on the label until the device is fully discharged.
	Warning! Danger: Hot Surface The surface of the heat dissipation area is hot when the device is operating. Do not touch it to avoid burns.
	Operate the device by referring to the User Manual.

2.4 System Wiring Introduction

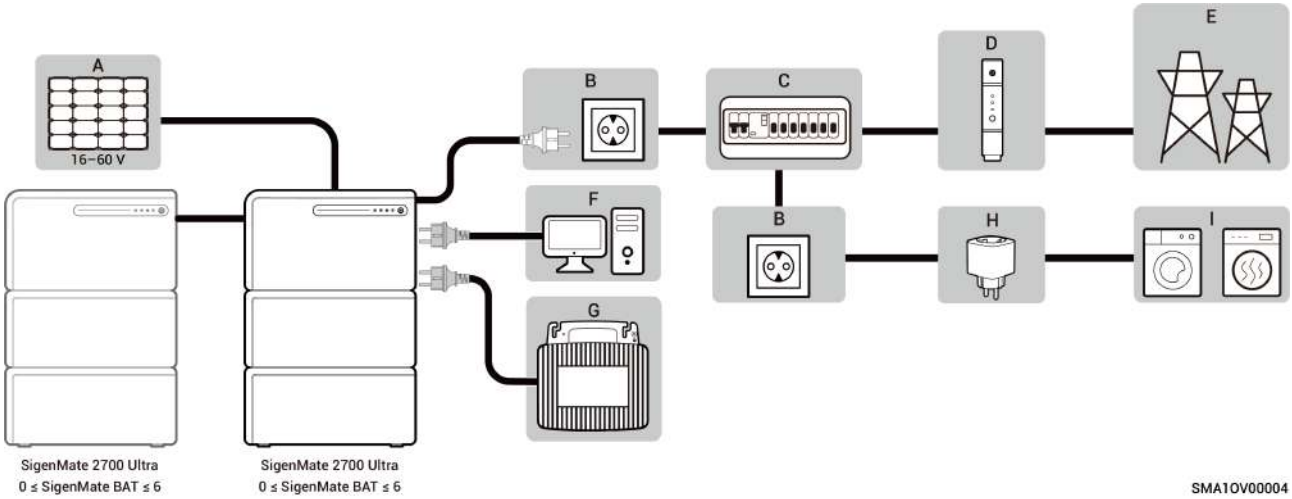

A. PV module	B. Household outlet	C. Household distribution box	D. Smart meter	E. Grid
F. Critical loads	G. Microinverter	H. Smart socket	I. Loads	-

(Optional) Installing the Meter

When the Sigen smart meter is used with SigenMate, you can obtain a better energy management experience.

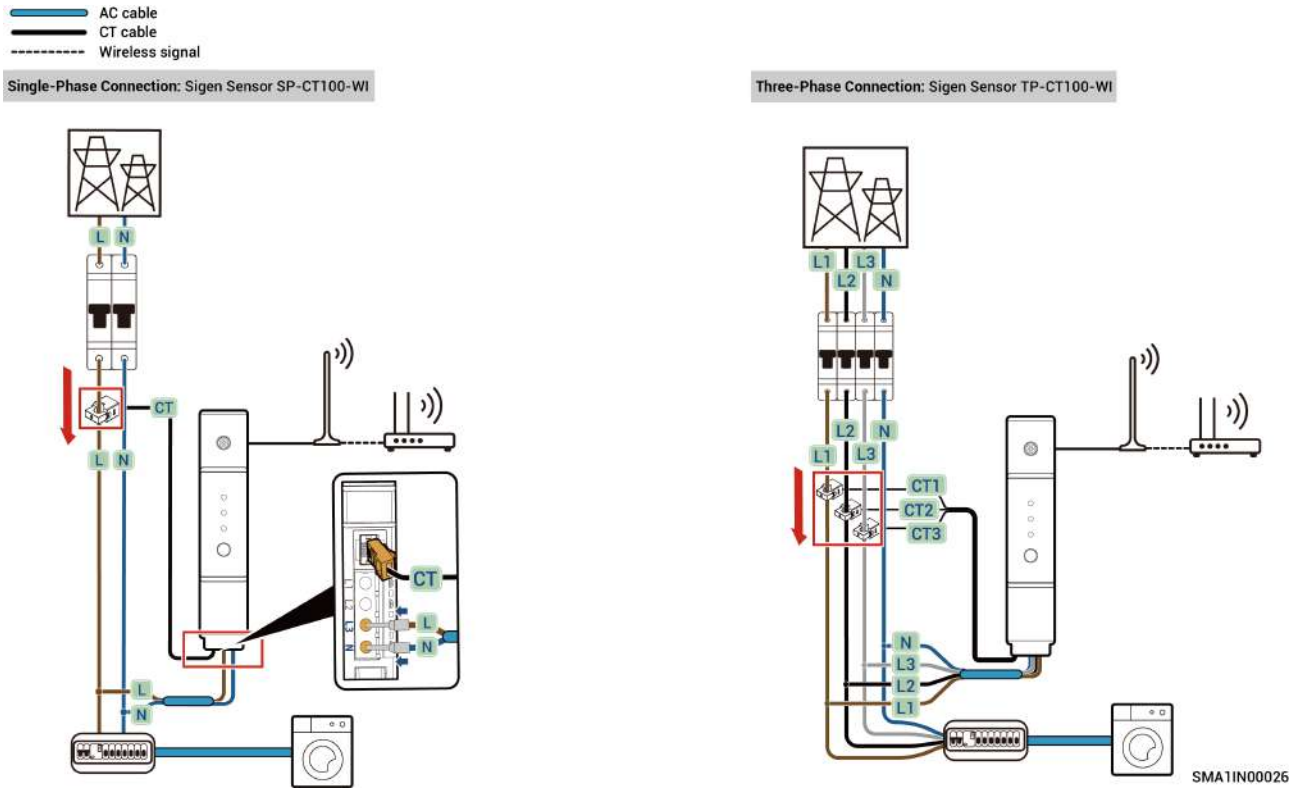

Category	Installation Guide
Single-phase meter	Sigen Sensor SP-CT100-WI Installation Guide
Three-phase meter	Sigen Sensor TP-CT100-WI Installation Guide

Chapter 3 Location Requirements

Tips

- Before installing the device, be sure to read the following installation requirements carefully. The company shall not be held liable for any device malfunction, damage, or personal injury occurring during operation due to failure to follow operational requirements.
- During actual installation, the selection of installation location should comply with local firefighting, environmental protection regulations, and other relevant laws. The specific installation location planning should be subject to EPC (Engineering, Procurement, Construction).

Installation Environment Requirements

- Do not install the device in a smoky, flammable, explosive, or corrosive environment.
- Avoid exposing the device to direct sunlight, rain, standing water, snow, or dust. Install the device in a sheltered place. Take preventive measures in operating areas prone to natural disasters such as floods, mudslides, earthquakes, and typhoons.
- Do not install the device in an environment with strong electromagnetic interference (EMI).
- The temperature and humidity of the installation environment should meet device requirements.
- The device shall be installed in an area at least 500 m away from corrosion sources such as high salt or high acidity (corrosion sources include but are not limited to seaside, thermal power plant, chemical plant, smelter, coal plant, rubber plant, and electroplating plant).
- In areas with good marine environments (such as Norway, where the nearshore salinity is ≤ 28 psu), the mounting distance of the device from the coastline can be appropriately relaxed to > 200 m.

Installation Location Requirements

- Do not tilt the device or place it upside down. Ensure that the device is horizontally installed.
- Do not install the device in locations with open flames or in low-lying areas where water can accumulate.
- Do not install the device in locations that are sealed, poorly ventilated, lacking fire protection measures, or difficult for firefighters to access.
- The device is hot when it is operating. If the device is installed indoors, please ensure that good ventilation is maintained.
- Do not install the device in mobile scenarios such as cruise ships and trains.
- You are recommended to install the device in a location where you can easily access, install, operate, maintain it, and view the indicator status.
- When installed in a garage, do not place the device where vehicles pass to avoid collisions.
- Do not install the device where children can reach it.

Installation Base Requirements

- Do not install the device on a flammable base.
- The installation base should meet the load-bearing requirement. Solid brick-concrete structures, concrete walls, and floors are recommended.
- The installation base should be flat, and the installation area should meet the installation space requirements.
- If drilling is required during device installation, ensure that there are no wires or pipes concealed within the installation base to avoid danger when drilling.

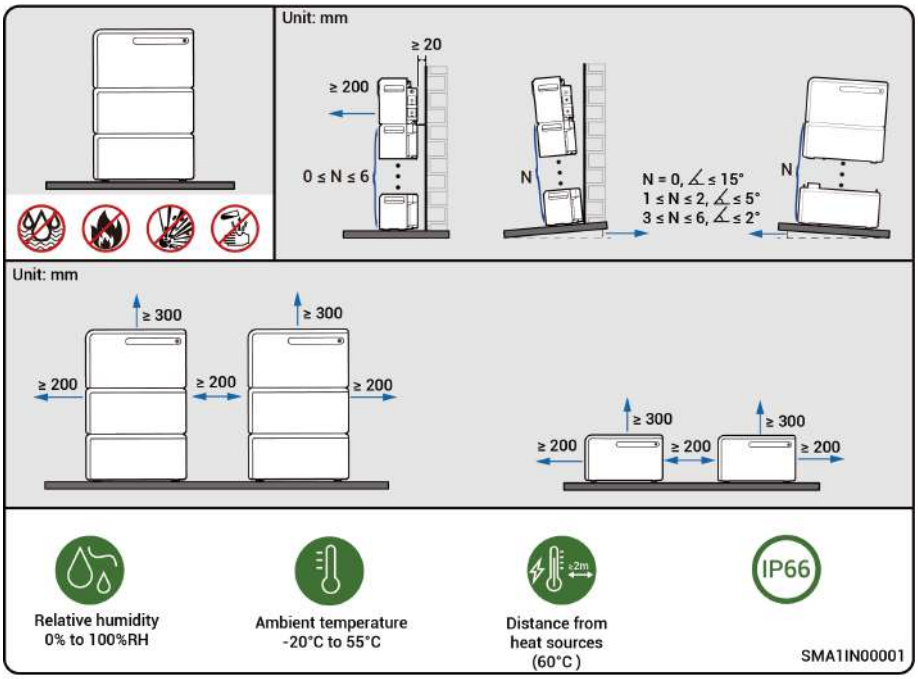

Chapter 4 Installing the SigenMate

Parts and accessories supplied with the packing box are personal assets of the owner and must be properly kept.

Scenario 1: SigenMate BAT = 0

Scenario 2: SigenMate + SigenMate BAT (N = 1)

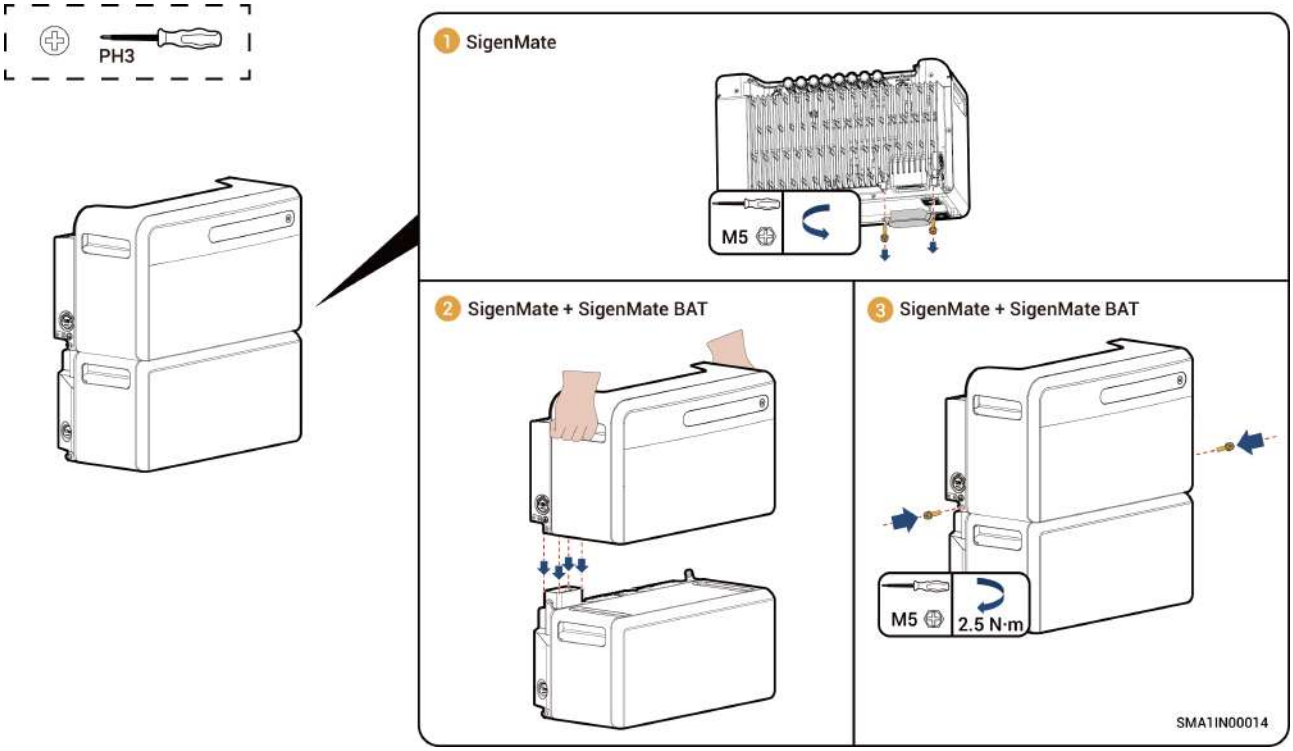

Scenario 3: SigenMate + SigenMate BAT (2 ≤ N ≤ 6)

Tips

Cover the SigenMate BAT with the dust cover supplied with the box before drilling.

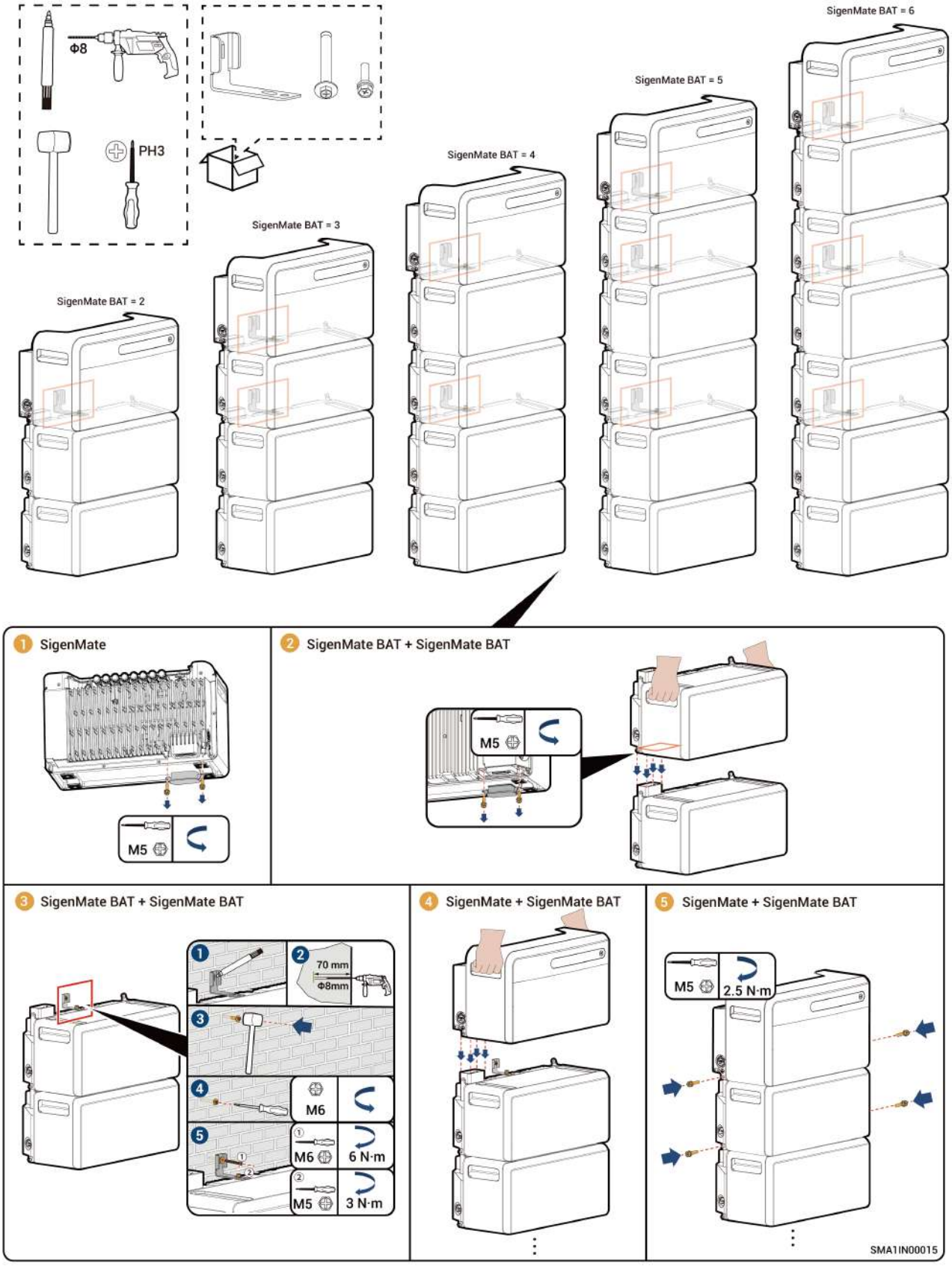
Φ8
PH3
SigenMate BAT = 2
SigenMate BAT = 3
SigenMate BAT = 4
SigenMate BAT = 5
SigenMate BAT = 6
1 SigenMate
M5
2 SigenMate BAT + SigenMate BAT
M5
3 SigenMate BAT + SigenMate BAT
70 mm
Φ8mm
M6
M6
6 N·m
M5
3 N·m
4 SigenMate + SigenMate BAT
5 SigenMate + SigenMate BAT
M5
2.5 N·m
SMA1IN00015

Chapter 5 Electrical Connections

Connecting the Protective Chassis Grounding Cable

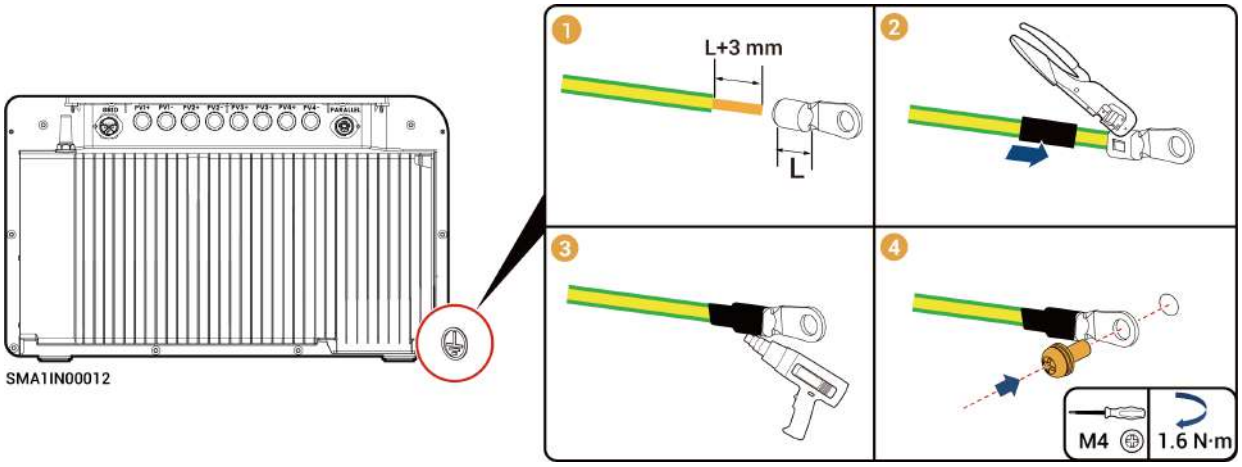

Connecting to the Grid

Tips

If the cable length or current-carrying capacity does not meet your requirements, please consult a professional before purchasing.

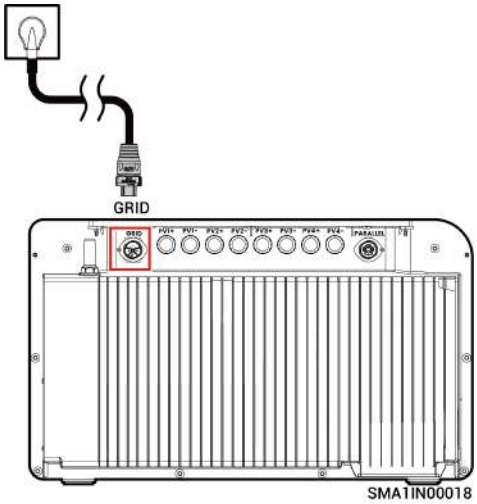

Connecting the PV Module

Caution

- Ensure all unused PV interfaces are sealed with waterproof plugs.
- PV module selection: rated current not exceeding 16 A, short-circuit current not exceeding 20 A, and voltage 16 V to 60 V.
- Do not connect two or more PV modules in series, otherwise the input voltage will exceed 60 V and may cause device damage.

PV Cable Requirements

To ensure the safe operation of the device, we recommend that you purchase PV cables through our official channels. Ensure each cable meets the following requirements:

- Current ≤ 25 A, conductor cross-sectional area 4 mm².
- Current 25 A to 35 A, conductor cross-sectional area 6 mm².

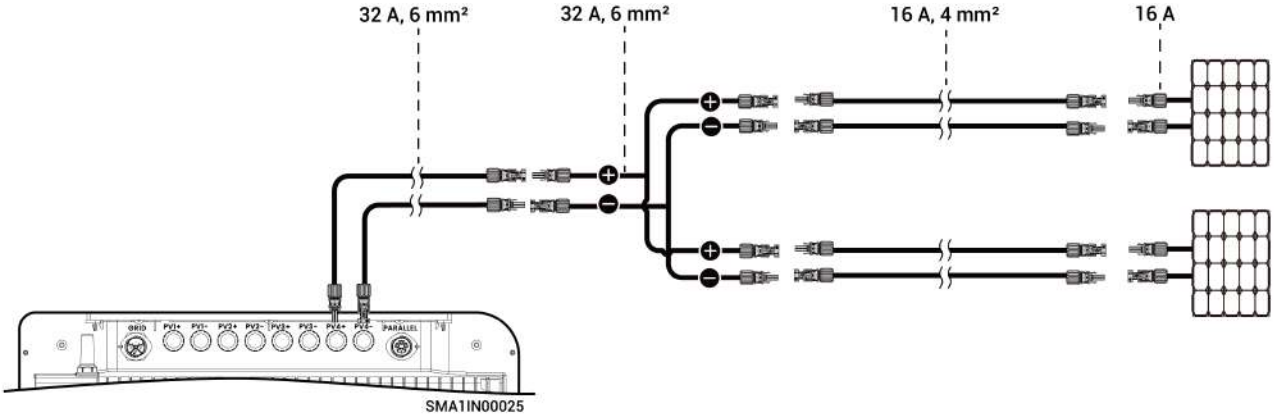

Direct Connection Method

Each PV module must be connected directly to the same set of PV input interfaces. A solar panel extension cord must be used to extend the connection distance (Please obtain the solar panel extension cord separately. For the model number, refer to SigenMate Accessory List).

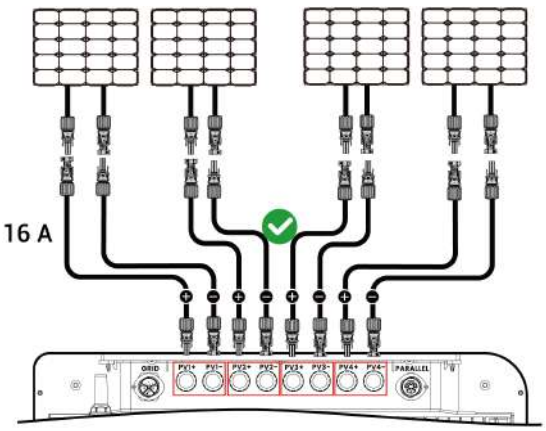

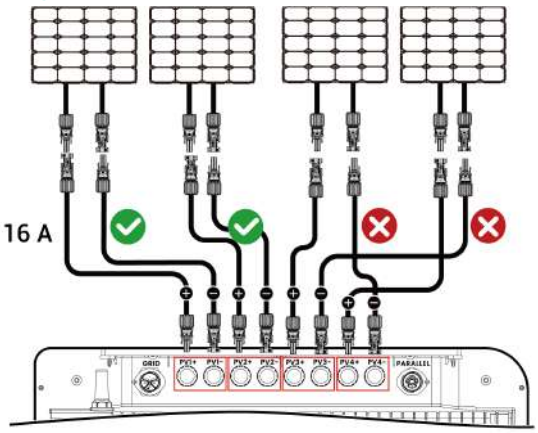

Parallel Connection Method

Every two PV modules connected in parallel form one group and are connected to the same group's PV input interfaces. This connection method requires a Y branch connector (please purchase the Y branch connector separately. For the model number, refer to SigenMate Accessory List).

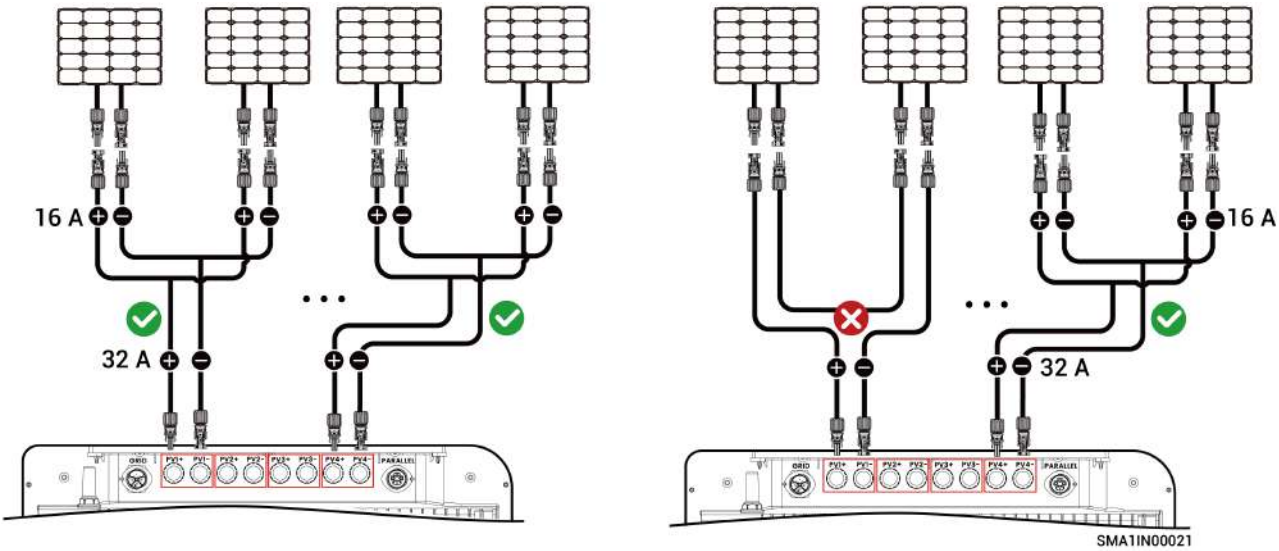

Removing the PV Terminal

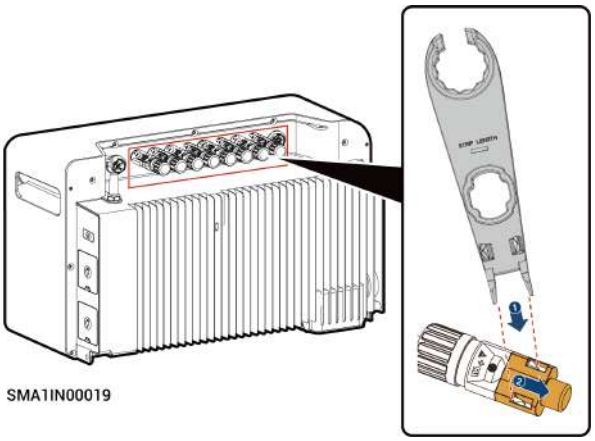

Parallel Connection

- Please purchase the parallel cable separately. For the model number, refer to SigenMate Accessory List.
- Before connecting in parallel, turn off, and disconnect the SigenMate from the household electrical circuit.
- A system can connect up to 3 SigenMate units in parallel, and any SigenMate unit can stack up to 6 SigenMate BATs.

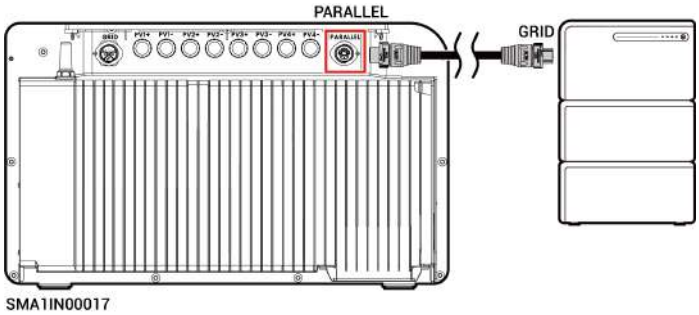

Connecting to the AC Socket

Supports microinverter input and load output.

- When microinverter input is supported, any AC socket may connect up to one microinverter with power ≤ 800 W.
- When supporting load output, the combined power of the two AC sockets is ≤ 3600 W. It is recommended that the connected load power be ≤ 1400 W so that the load remains continuously powered during a power outage.

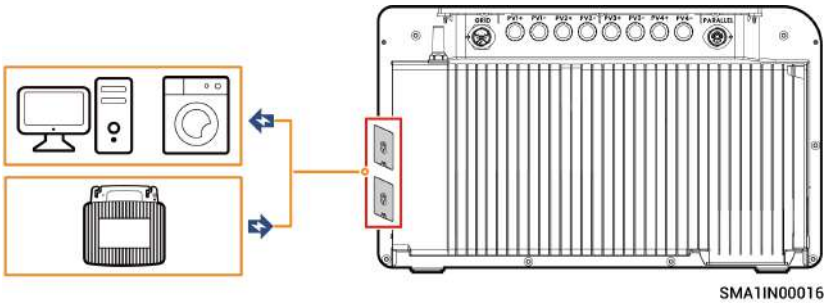

Chapter 6 SigenMate Power On/Off

Scenario 1: No PV Input and No AC Input

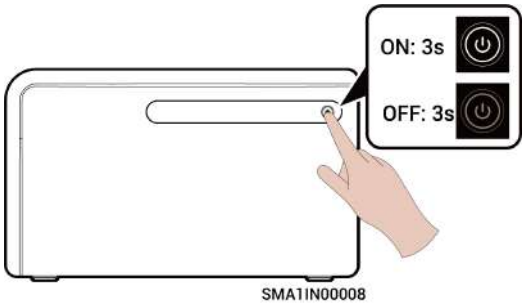

Scenario 2: Connecting to the PV Module or to the Grid

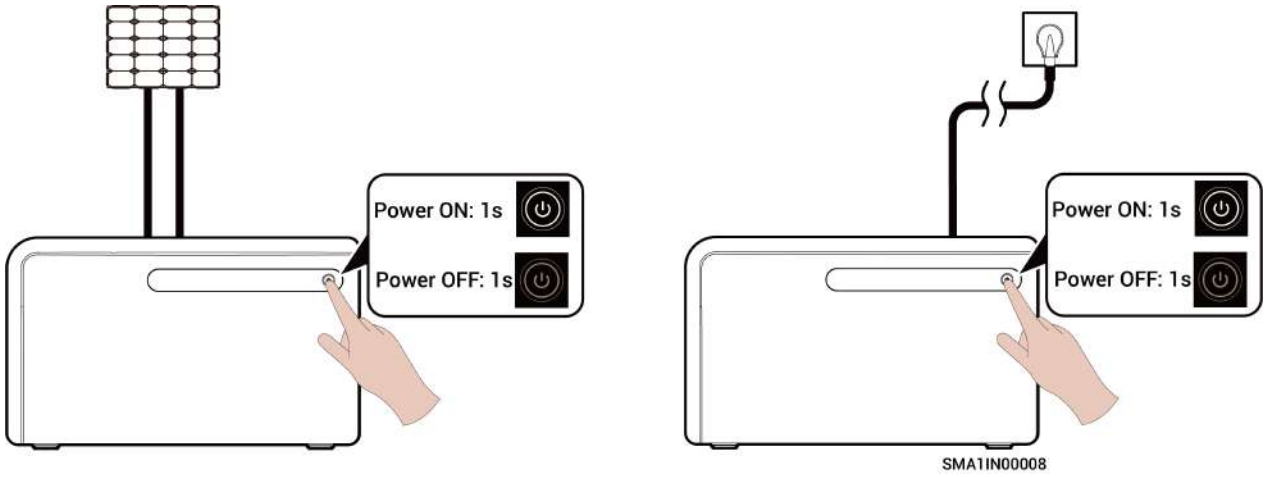

Chapter 7 Using the App to Manage the SigenMate

The screenshots in this document are for reference only. Interfaces in different periods may vary. Please refer to the actual interface.

7.1 Downloading the App and Logging In

Downloading the App

Tips

- Mobile operating systems: Android 6.0, iOS 12.0, and later versions.
- Before operating, make sure the SigenMate is powered on.

Use the following two methods to download.

Registration and Login

Tips

Please enable Bluetooth on your phone in advance.

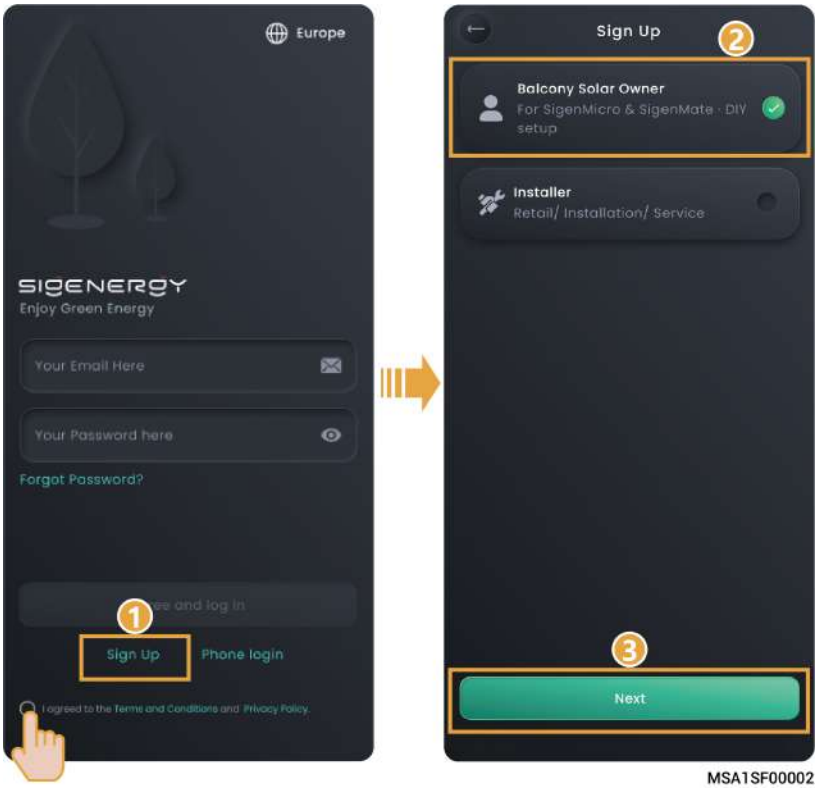

7.2 Adding the SigenMate

Creating a New System and Adding the SigenMate

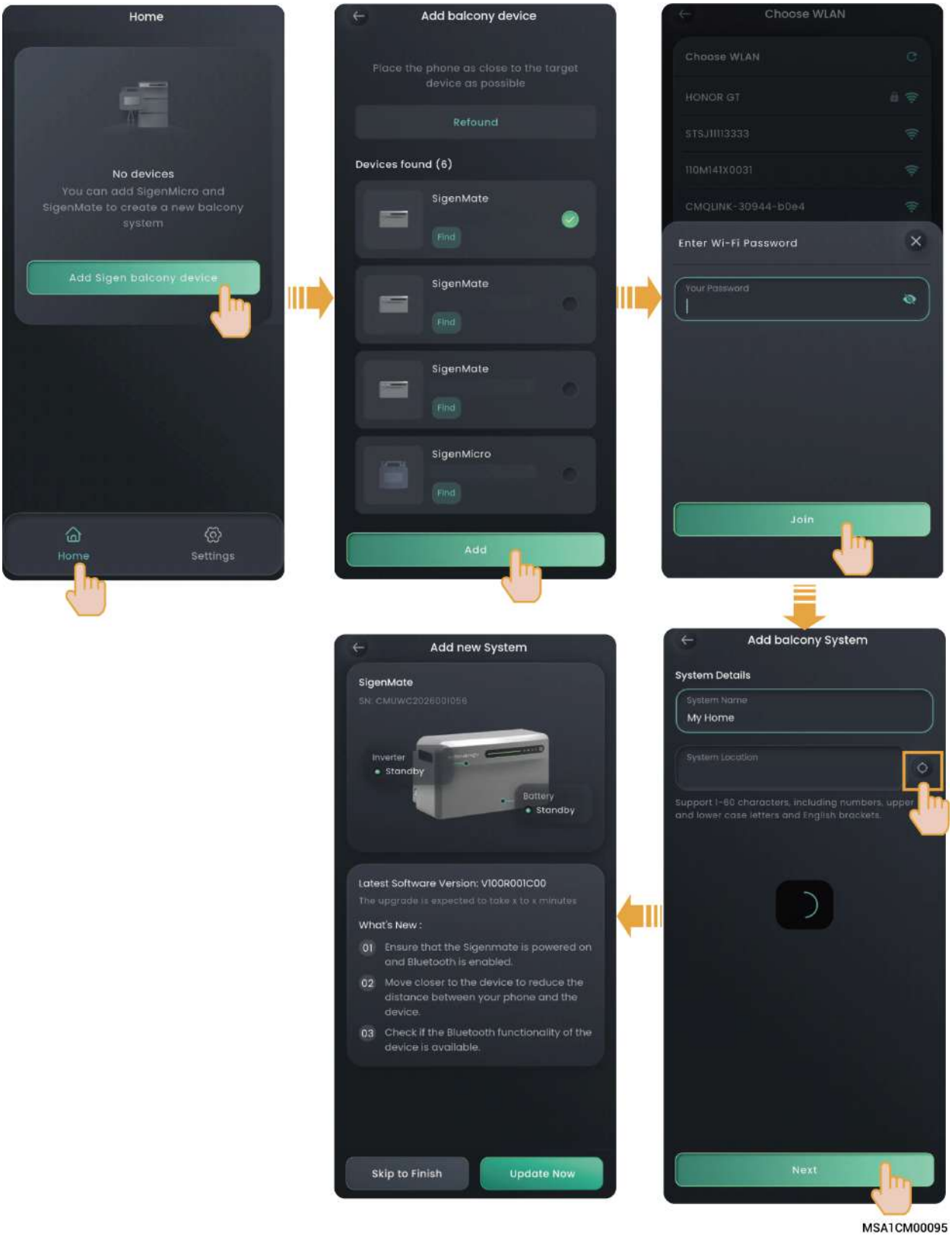

MSA1CM00095

Adding the SigenMate to an Already Existing System

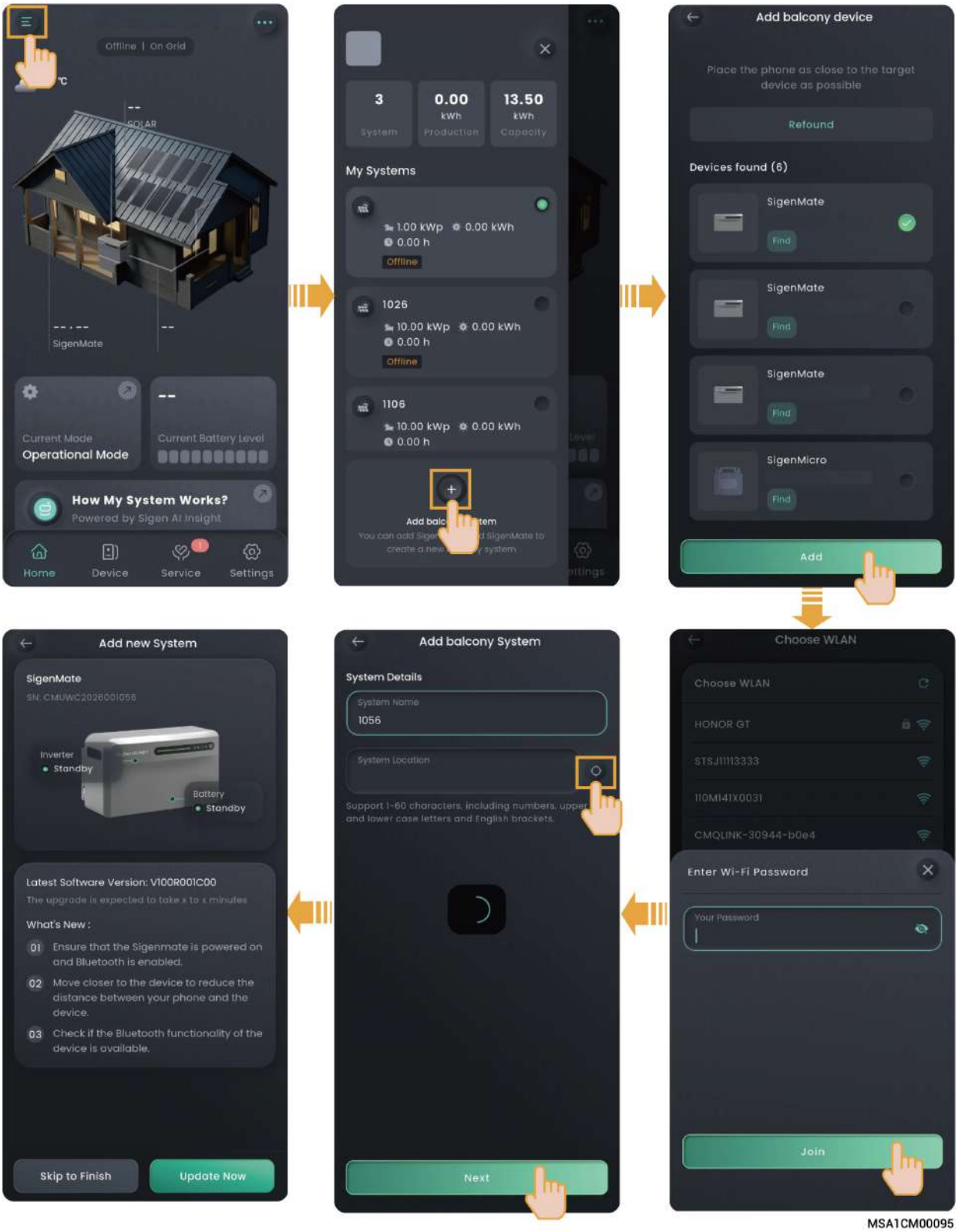

MSA1CM00095

7.3 (Optional) Adding the Meter

7.3.1 Adding the Sigen Meter

If a Sigen meter is already installed, please follow the steps below to add the meter.

Adding via Bluetooth

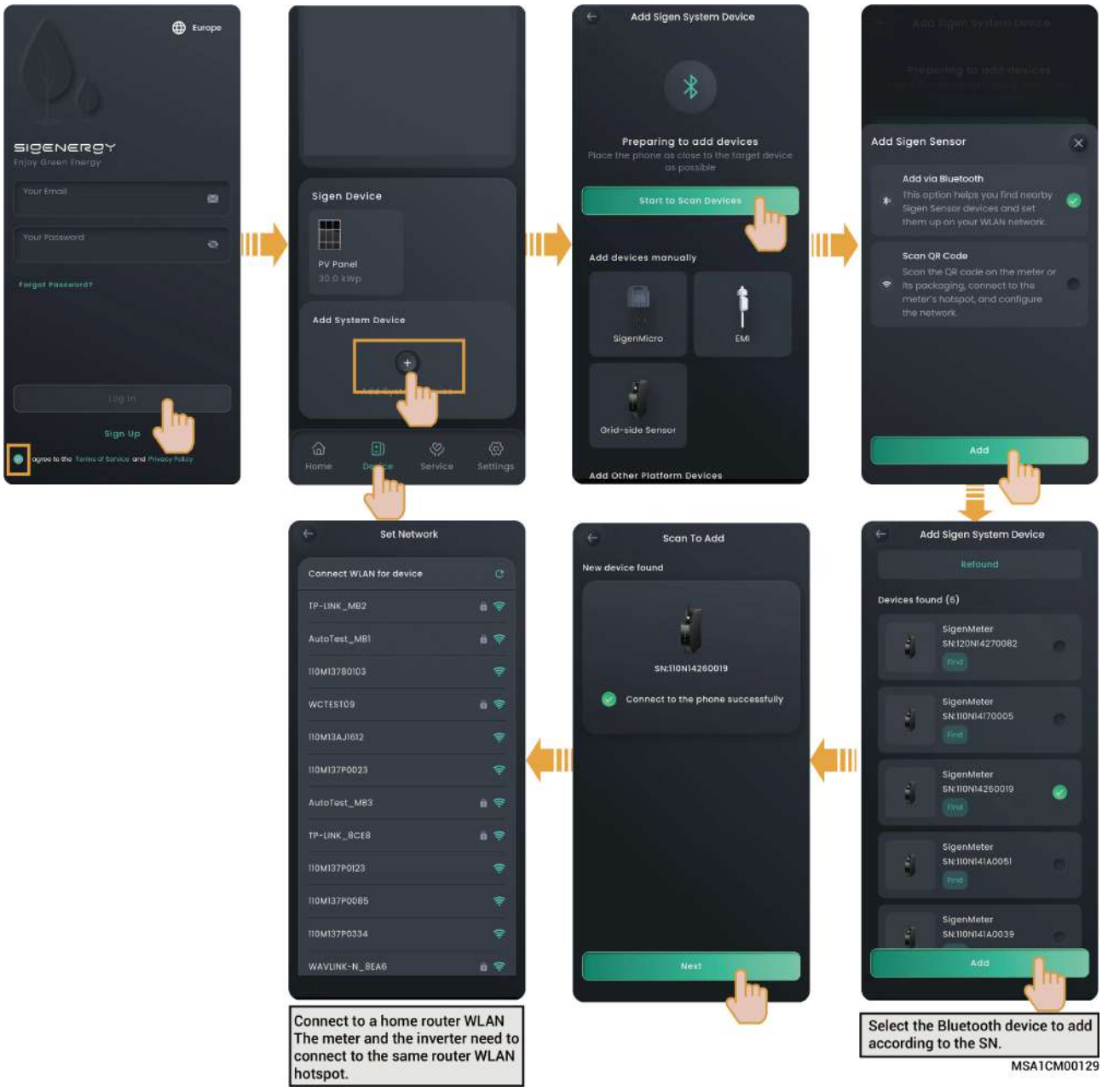

Adding via Scanning the QR Code

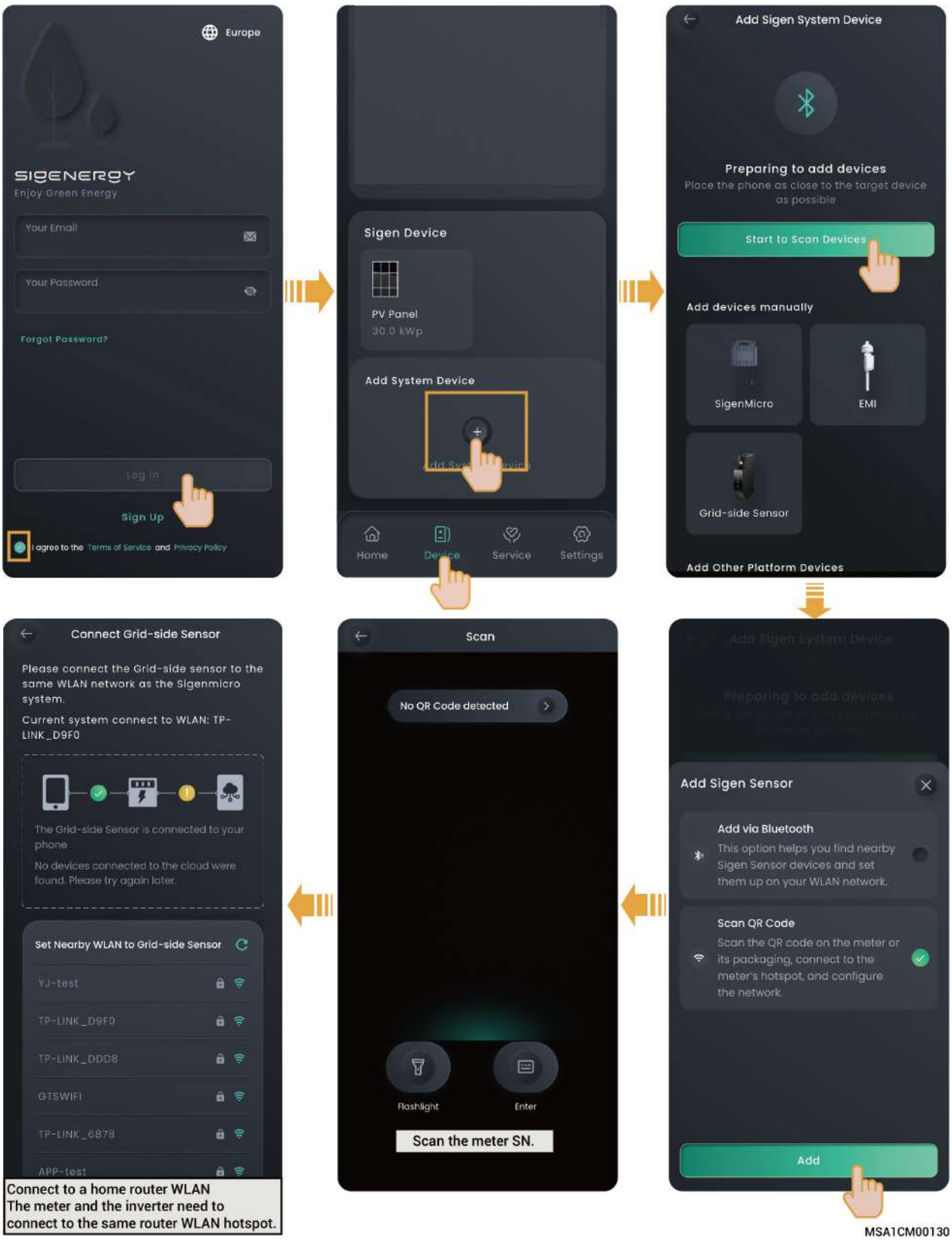

7.3.2 Adding the P1 Meter

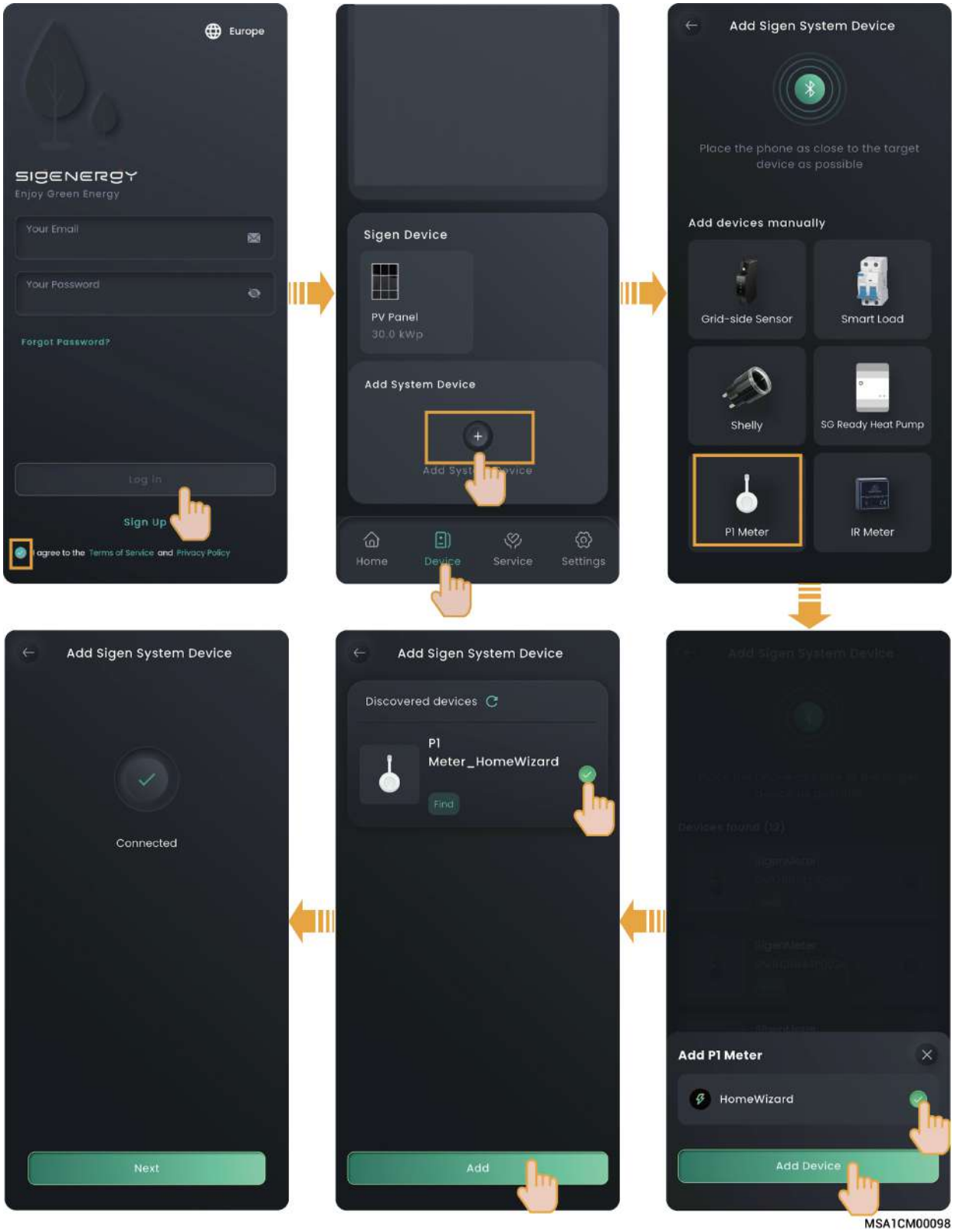

7.3.3 Adding the IR Meter

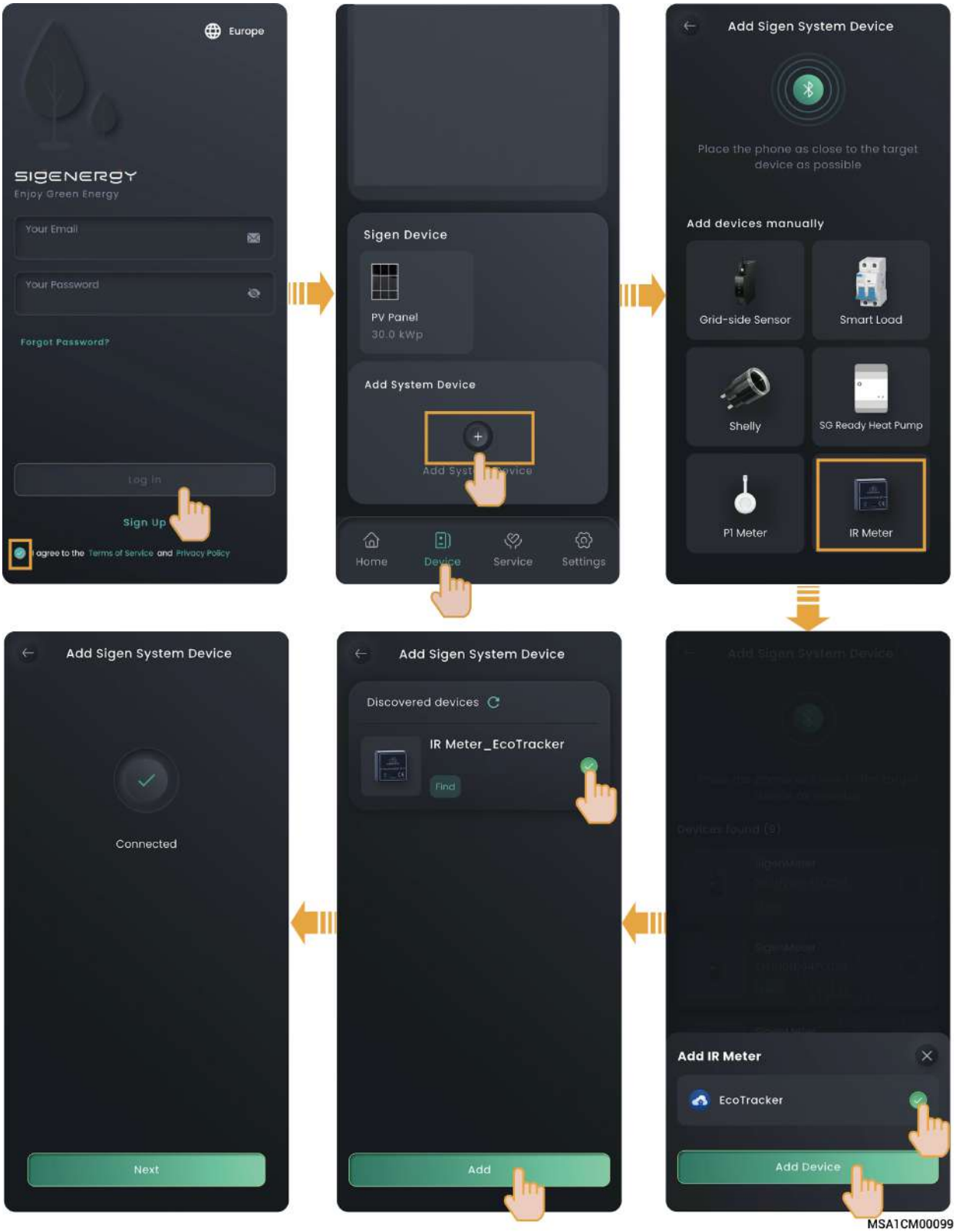

7.4 Energy Storage Working Mode

Tips

The energy storage system supports multiple working modes. In some countries, load shedding mode and virtual power plant (VPP) scheduling mode are available, subject to your app interface.
For detailed steps, refer to the Energy Storage Working Mode section of the mySigen App User Manual.

Sigen AI Mode

By obtaining local peak and off-peak electricity tariffs and weather data, combined with user electricity consumption habits, the Sigen AI mode can customize intelligent electricity usage solutions to maximize customers' cost savings.

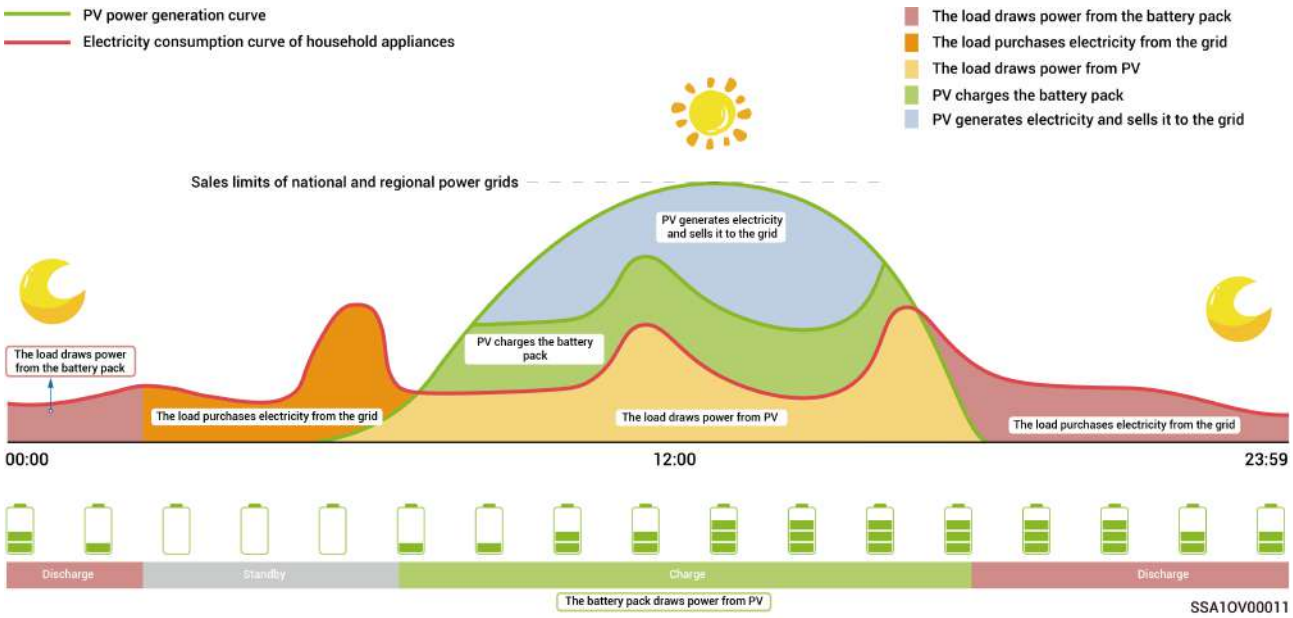

Maximum Self-consumption Mode

- When there is sufficient solar energy, the electric energy generated by the PV system will first be supplied to the loads, the surplus electric energy will be stored in the batteries, and then the remaining energy will be sold to the grid. When there is insufficient solar power, the batteries will release electric energy to the loads. By increasing the self-consumption ratio of the PV system and improving the self-sufficiency ratio of household energy, you can effectively save on your electricity bills.
- This mode is suitable for areas with high electricity tariffs or zero-power grid connection restrictions.

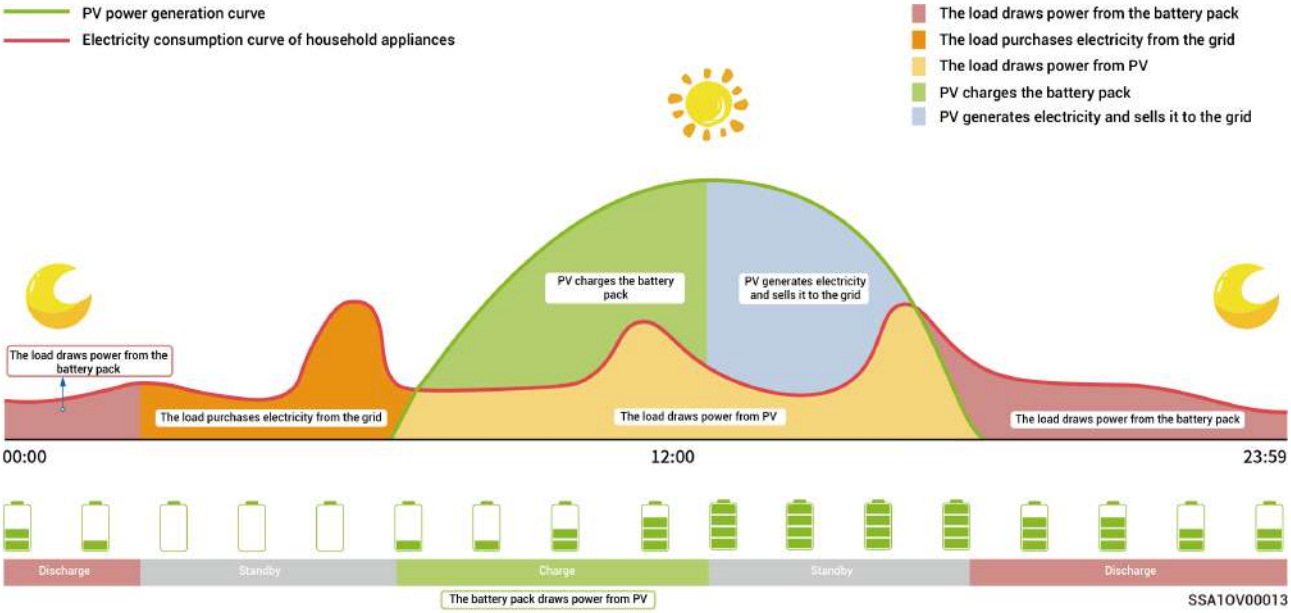

Time-based Control Mode

- The charging period, discharging period, and self-consumption period need to be set manually. When electricity tariffs are high, the surplus power from PV power generation and battery power can be sold to the grid, and the batteries can be charged during periods of low electricity tariffs to save electricity bills.
- If no time period is set, the energy storage system will be in standby mode without discharging. The PV system will prioritize powering the loads, and the surplus power will be used for charging the energy storage system.
- Up to 24 charging and discharging or self-consumption time periods can be set.
- It is suitable for areas with peak and off-peak electricity tariffs and significant price differences.

When entering this period, the battery capacity will be recorded. When the PV power is greater than the loads, the remaining PV power will charge the batteries. When the PV power is less than the loads, the batteries can be discharged to the loads. However, when the battery capacity decreases and approaches the battery capacity value when entering this period, the batteries will stop discharging.

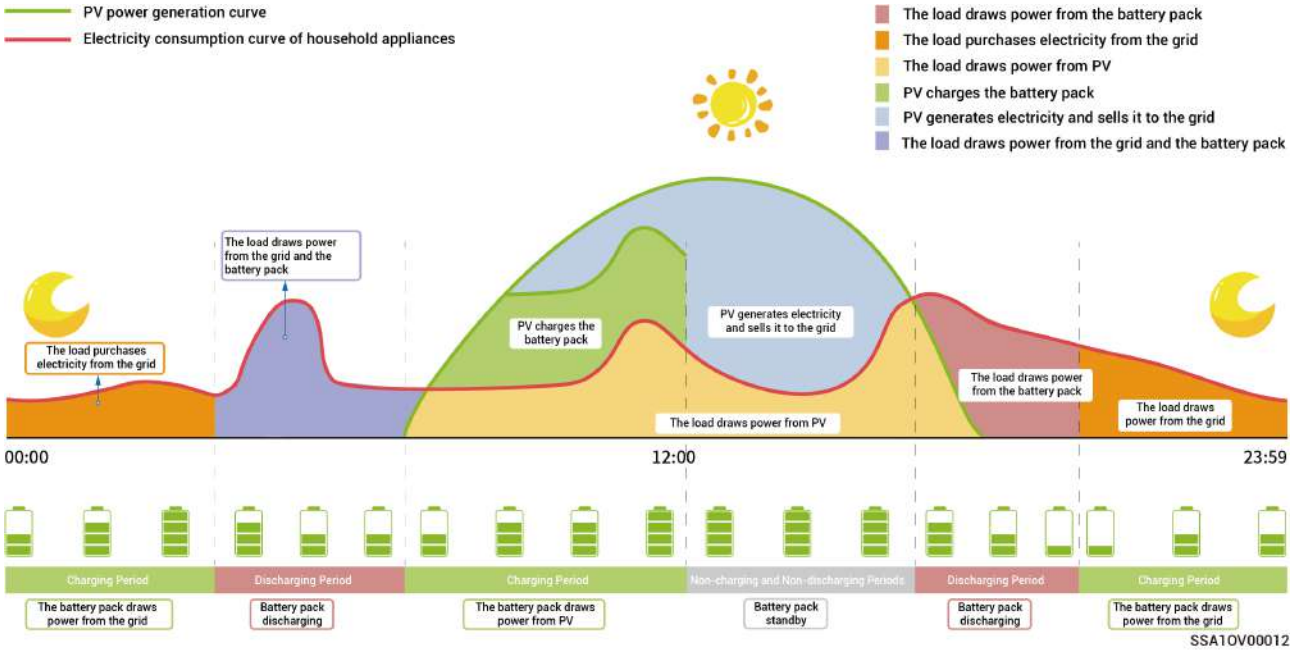

VPP Scheduling Mode

After the owner and a third-party VPP operator complete the signing or registration process, your energy storage system will be connected to the VPP intelligent scheduling network. The app interface will display this mode and it will be automatically selected.

7.5 Backup Capacity Setup

Tips

- For detailed steps, refer to the Backup Capacity Setup section of the mySigen App User Manual.
- You can manually perform the setup according to the power interruption frequency of your regions and time away from home.

When connecting loads to the load port, manually set the "Backup Reserve" value in the mySigen App. In grid connection mode, the battery stops discharging when the configured backup SOC is reached. In off-grid mode, the backup power stored in the battery can be used.

Example: The backup power SOC is set in maximum self-consumption mode.

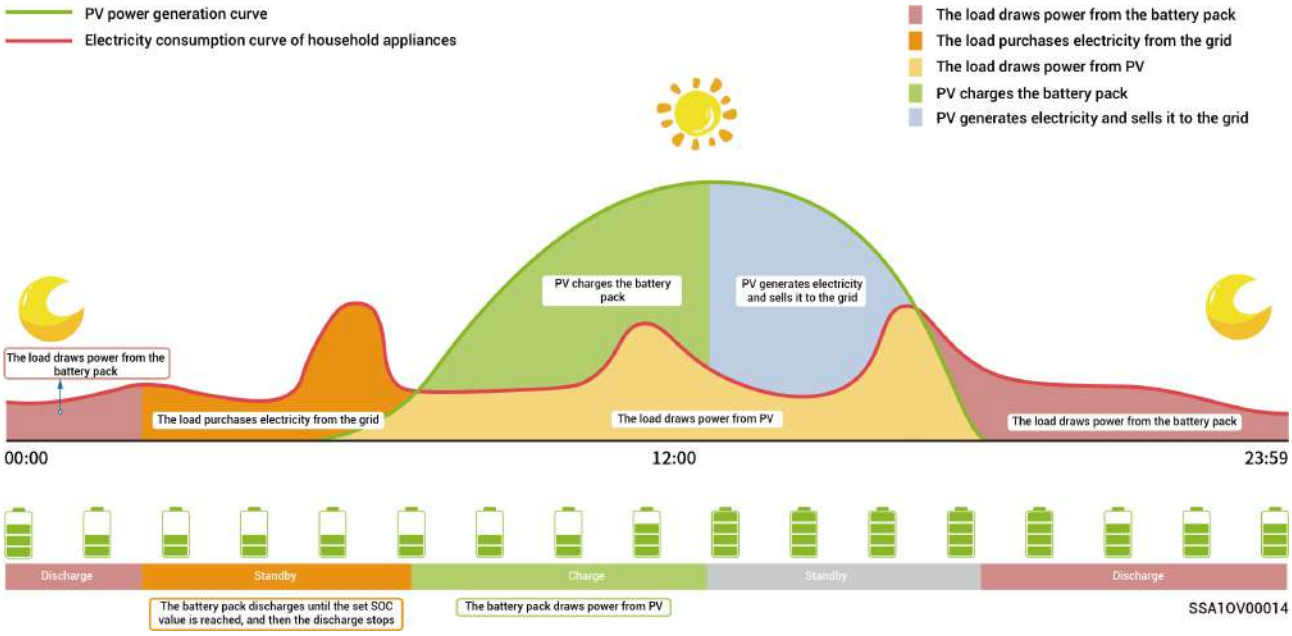

7.6 Deleting the System

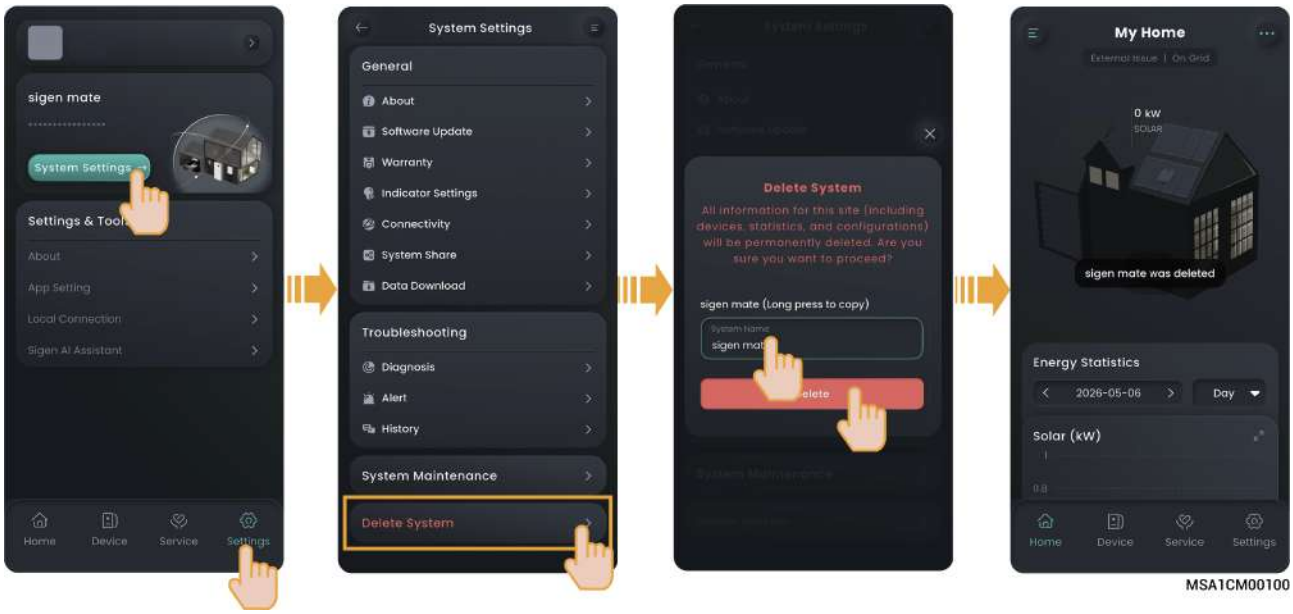

Chapter 8 System Maintenance

8.1 Routine Maintenance

To ensure long-term optimal operation of the device, it is recommended to perform routine maintenance as described in this chapter.

Inspection Item	Inspection Method	Power Off or Not	Maintenance Interval
System cleaning	Regularly check whether the device is covered and dirty. Clean it up when necessary. Do not use tools that may cause electric shock or damage insulation, such as wire brushes.	Yes	Once every 3 months
System operating status	● Inspect the device's exterior, terminals, and external cables for any damage or deformation. ● Check whether abnormal noises are present during device operation. ● When the device is operating, check whether the device parameters are correctly set.	No	Once every 6 months

8.2 SigenMate Capacity Expansion

Caution

Before adding the SigenMate BAT, ensure the system is completely powered off to protect personnel and the device. If installation is performed while the system is not powered off, any damage caused will not be covered by the warranty.

1. Ensure the SigenMate is in the off state (all indicator lights are off).
2. Disconnect the cables connected to the SigenMate.
3. To install the SigenMate BAT, refer to Scenario 2 and Scenario 3 in the section Installing the SigenMate.
4. After connecting the cables, start the SigenMate, and check in the app whether the SigenMate BAT count is correct.

8.3 Operating with Low battery

Due to the battery pack's self-discharge characteristics, power loss will occur. If the device is left uncharged for a long time, overdischarge may occur and damage the device. Charge the device promptly when the battery is low.
Under normal conditions, the device can automatically recharge itself based on its operating status. If the device cannot be charged, please contact the after-sales service center and have it serviced within the specified time. If loss of battery capacity or irreversible damage is caused by exceeding that period, the company will not be liable.

If the battery level is below 10%, complete charging within 7 days

If the battery level is below 20%, complete charging within 30 days

Scenarios that may prevent charging (including but not limited to):

- No input on the PV side, and the grid side has been without power for an extended period.
- Device failure.
- Parameters are not set correctly.

8.4 Emergency Measures

Fire Emergency Measures

Danger

- Shut down the device or cut off the mains switch if it is safe to do so.
- High temperatures can deform or damage the battery pack, causing electrolyte to spill and even release toxic gases. Do not approach, and wear personal protective equipment.
- If the fire is small, use a carbon dioxide or ABC dry powder fire extinguisher to extinguish the fire.
- If the fire is spreading, evacuate from the building or device area immediately and call the fire department. Do not re-enter the burning building.
- Firefighters must not come into contact with high-voltage components during firefighting. Otherwise, electric shock may occur.
- Do not use the device after the fire has been extinguished.

Flood Emergency Measures

Danger

- Shut down the device or cut off the mains switch if it is safe to do so.
- Do not touch the battery pack if it is submerged to avoid electric shock.
- After the flood recedes, do not use the device.

Emergency Measures for Battery Pack Abnormalities

Danger

- When the battery pack has an abnormal odor, electrolyte leakage, or becomes hot, do not approach or touch it, and immediately contact professionals to handle it. Qualified professionals must wear safety goggles, rubber gloves, gas masks, protective clothing, and other personal protective equipment to protect themselves.
- The electrolyte is corrosive; contact may cause skin irritation or chemical burns. If you accidentally come into contact with electrolyte, immediately take the following measures:
  - Inhalation: Evacuate the contaminated area, keep fresh air circulating, and seek medical attention immediately.
  - Eye contact: Rinse the eyes with plenty of water for at least 15 minutes, do not rub the eyes, and seek immediate medical attention.
  - Skin contact: Wash the affected area with plenty of soap and water, and seek medical attention immediately.
  - If swallowed: induce vomiting and seek medical help immediately.
- Do not continue to use an abnormal battery pack.

Emergency Measures for Battery Pack Drop or Impact

- If a noticeable odor, smoke, fire, etc., occurs, please move away from the device immediately and contact qualified professionals to handle it.
- Do not use the battery pack after it has been dropped or subjected to impact.

Chapter 9 FAQ

What should you do if you encounter a problem not covered in this manual during use?

Contact Us: https://www.sigenergy.com/en/contact
For more frequently asked questions, refer to FAQ.

Are there any other precautions to note during installation and use?

Ensure the household outlet is properly grounded.

Can PV modules be connected in series?

Not allowed. Do not connect two or more PV modules in series, otherwise the input voltage will exceed 60 V and may damage the device.

Can I increase or decrease the SigenMate BATs? Can new and old SigenMate BATs be used together?

You can increase or decrease the SigenMate BATs. For the operation steps, refer to SigenMate Capacity Expansion. New and old SigenMate BATs can be used interchangeably.

After parallel connection, how much load power can the AC socket support?

When 2 SigenMate units are paralleled, they support connection of loads ≤ 2800 W; when 3 SigenMate units are paralleled, they support connection of loads ≤ 3600 W. These power levels can be delivered by any single AC socket output on any SigenMate, or by the combined output of multiple AC sockets.

Does the SigenMate support connecting the microinverter and loads at the same time?

Support.

- If uninterruptible loads and third-party microinverters are connected, it is recommended to first connect a smart socket at the third-party microinverter input to ensure that, during a power outage, the system can control the microinverter's on/off state and avoid affecting the load's power supply when turning on/off the microinverter.
- If uninterruptible loads and the Sigen microinverter are connected, there is no need to add the smart socket, and the system can coordinate control to keep the loads continuously powered.

The maximum power of each PV input interface is 1000 W. Can I connect PV modules that exceed 1000 W to each PV input interface?

Yes. The operating voltage (16 V to 60 V) and operating current (≤ 32 A) requirements must be met. This also helps optimize the utilization of solar energy under conditions of insufficient sunlight.

Can third-party electric meters be used?

Yes. Compatible with Shelly Pro EM, Shelly Pro 3EM, and Shelly 3EM smart meters.

Chapter 10 Appendix

Technical Parameters

For details of SigenMate's parameters, please refer to the corresponding Sigen Product Datasheets.

SigenMate Accessory List

No.	Accessory Name	Accessory Model	Description
1	Plug Cable	SigenMate EU Plug Cable-12-1500	EU Plug Cable 12A 15m
		SigenMate EU Plug Cable-16-300	EU Plug Cable 16A 3m
		SigenMate EU Plug Cable-16-1500	EU Plug Cable 16A 15m
2	PV Cable	SigenMate PV Cable-16-500	PV Cable 16A 5m
		SigenMate PV Cable-16-1000	PV Cable 16A 10m
		SigenMate PV Cable-32-500	PV Cable 32A 5m
		SigenMate PV Cable-32-1000	PV Cable 32A 10m
		SigenMate DC Y Connector	32A 0.5m
3	AC Parallel Cable	SigenMate AC Parallel Cable	Parallel Cable 2m
4	Solar Panel	TWMNH-54HD	500W Solar Panel
5	Single-Phase Smart Meter	Sigen Sensor SP-CT100-WI	-
6	Three-Phase Smart Meter	Sigen Sensor TP-CT100-WI	-